Quester Tangent Corporation

Denver Regional Transportation District (Denver RTD)
Contract N8US-30-F0003

Monitoring and Diagnostic System (MDS)

CCTV Car Monitoring Network Interface Control Document (ICD)

Prepared by:	**Leslie Clark** **Technical Writer**
Verified by:	**Jim Kightley** **Project Engineer**
Approved by:	**Jim Kightley** **Project Engineer**

Issue Date: 16 February 2017
Document Number: DDN-0432-0097
Revision: R04

QUESTERTANGENT
Delivering Train Electronics

DATE	REVISION	DESCRIPTION
23-Sept-2011	R00	Initial version
16-Apr-2012	R01	Section 2, 4.3 – Include information received from Inter-M, edited by Quester Tangent
3-May-2012	R02	Section 4.3 – Remove PEO and MON from SCI list.
27-July-2012	R03	Updated to include receiving the Car Number parameter
16-Feb-2017	R04	Section 6.4, Table 6 – nvi00TimeStamp variable selector corrected.

DOCUMENT REVIEW AND RELEASE

Quester Tangent document review and approval is controlled through a formal workflow process with electronic tracking using a document management system.

INTELLECTUAL PROPERTY

Intellectual property provided herein is exclusively supplied to support the operation and maintenance of Quester Tangent's products. Quester Tangent expressly retains all other intellectual property and manufacturing rights.

COPYRIGHT

Copyright © 2017 by Quester Tangent Corporation. All rights reserved. This item and the information contained herein are the property of Quester Tangent Corporation. No part of this document may be reproduced, transmitted, stored in a retrieval system, or translated into any language or computer language in any form or by any means, electronic, mechanical, magnetic, optical, chemical, manual, or otherwise, without the express written permission of Quester Tangent Corporation.

Quester Tangent Corporation
6582 Bryn Road
Saanichton, B.C., Canada V8M 1X6

Tel: 250-656-6677
Fax: 250-655-4696

www.questertangent.com

Table of Contents

1 Introduction 5
2 Network Physical Layer Interface Design 5
3 Network Management 5
3.1 Node Documentation 5
3.1.1 Node Self-Documentation String 5
3.1.2 Node Program ID 6
4 Network Node 6
4.1 Node Object – Object #0 8
4.1.1 nvi00ObjRequest 8
4.1.2 nvo00ObjStatus 8
4.1.3 nvi00TimeStamp 8
4.1.4 nci00NetConfig 8
4.2 Monitoring Object – Object #1 8
4.2.1 nvi01Subscribe 8
4.2.2 nvo01StatusBits 9
4.2.3 nvi01TransferState 9
4.2.4 nvi01CDTParam 9
4.3 SCI Version Object – Object #3 10
4.3.1 nvi03SCIVersionReq 10
4.3.2 nvo03SCIVersion 10
5 Network Interface 11
5.1 General 11
5.2 Subsystem Specific Network Interface Declarations 11
6 Self-Installation Data 11
6.1 Domain Configuration 11
6.2 Location Configuration 11
6.3 Address Configuration 11
6.4 Network Variable Configuration 12

List of Tables

Table 1: CCTV System – Network Physical Layer Interface Design 5
Table 2 Parameter Data Required from CDT 9
Table 3: SCI Index Number Assignment 10
Table 4: SCI Information 10
Table 5: Address Table 11
Table 6: Network Variable Configuration (CCTV) 12

List of Figures

Figure 1: CCTV Node 7

1 Introduction

This document defines the CCTVsubsystem specific interface to the MDS car monitoring network described in the MDS Car Monitoring Network ICD (DDN-0432-0080).

This document is intended as the main tool for development and integration of the CCTV subsystem onto the train for the supplier as well as for Hyundai-Rotem and Quester Tangent.

Information contained in this document is essential to the supplier in order to complete the software that will implement the MDS Car Monitoring Network interface. For this reason, any updates of the information contained in this document will be made available to the supplier with the shortest possible delay.

2 Network Physical Layer Interface Design

Table 1 documents the CCTV subsystem's network physical layer interface design. The design does not conform to the MDS Car Monitoring Network ICD Section 4 requirements where noted. Design may be updated to conforming once Inter-M completes environmental and interoperability testing.

Table 1: CCTV System – Network Physical Layer Interface Design

Feature	Subsystem Info	Notes
Network processor	FT5000	Non Conforming
Transceiver type	FT-X3	Non Conforming
LEDs (Tx, Rx, Service)	Tx - Green LED Rx – Green LED Service – Yellow LED	
Service pushbutton	Momentary pushbutton switch	
Common mode isolation choke	FT-X3 include	Non Conforming
Magnetic shield	Not used	Non Conforming
Surge absorbing flash tubes	Not used	Non Conforming
Submit subsystem network interface design for review by QT?	Yes	

3 Network Management

The subsystem shall be capable of self-installation, i.e. set the system's own network configuration without intervention by a network management tool. Full details of the required settings are provided in the current version of the MDS Car Monitoring Network ICD document (DDN-0432-0080) and in this document.

All nodes shall support possible future usage of a network management tool, as described in the MDS Car Monitoring Network ICD document.

3.1 Node Documentation

3.1.1 Node Self-Documentation String

The Neuron C source code declaration shall be:

```
#pragma set_node_sd_string "CCTV, Inter-M, PPPP, DDDD"
```

PPPP: Supplier part number

DDDD: Neuron SCI revision date

3.1.2 Node Program ID

The Neuron C source code declaration shall be:

```
#pragma set_id_string "CCTV"
```

4 Network Node

Figure 1 shows the CCTV Node functional blocks, network variables and configuration properties. The following subsections provide network variable and configuration property details.

Note: Object numbering is consistent across all subsystems on the train. Object #2 (SCI Update) is not used for the CCTV node.

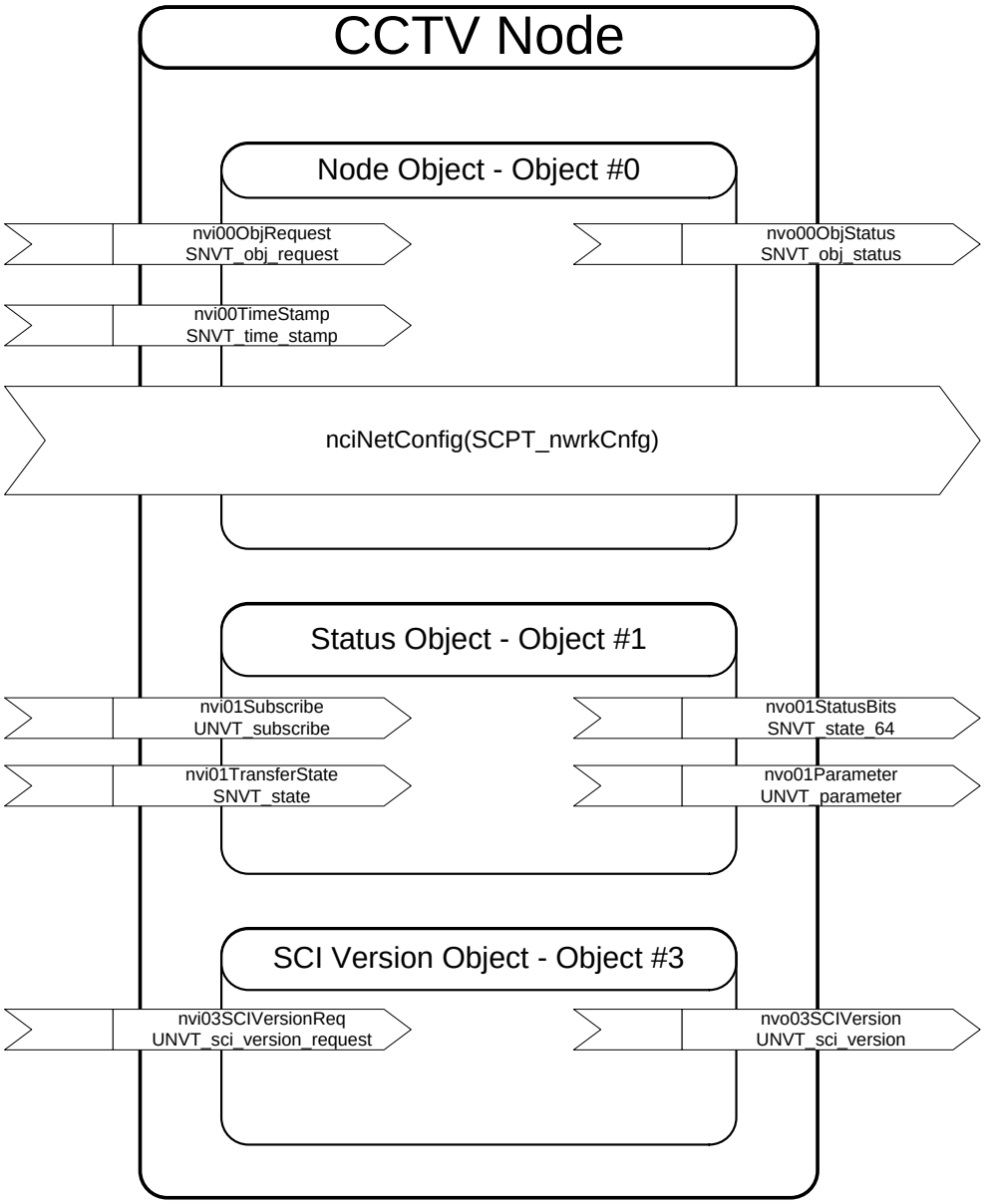

Figure 1: CCTV Node

4.1 Node Object – Object #0

4.1.1 nvi00ObjRequest

Declaration: network input sd_string("@0|1") SNVT_obj_request nvi00ObjRequest

Description: Mandatory variable defined in LonMark Functional Profile: Node Object, LonMark SNVT Master List. This input variable provides the mechanism to request a particular mode for the node as a whole.

4.1.1.1 Data Value

Refer to the SNVT Master List and DDN-0432-0080 for request types supported.

4.1.2 nvo00ObjStatus

Declaration: network output sd_string("@0|2") SNVT_obj_status nvo00ObjStatus

Description: Mandatory variable defined in LonMark Functional Profile: Node Object, LonMark SNVT Master List. This output variable reports the general status of the node.

Destination: CDT

4.1.2.1 Data Value

Refer to the SNVT Master List and DDN-0432-0080 for status items supported.

4.1.3 nvi00TimeStamp

Declaration: network input sd_string("@0|3") SNVT_time_stamp nvi00TimeStamp

Description: Another subsystem shall provide the current UTC time to all other subsystems. The CDT may also transmit this variable.

4.1.3.1 Data Value

Current time in UTC format.

4.1.4 nci00NetConfig

Declaration: config network input sd_string("&0,,0\x90,25;") SCPTnwrkCnfg nci00NetConfig

Description: All nodes must support self-installation and provide a configuration property to allow a network tool to override the node's self-installation procedure. If the value of this variable is set to CFG_EXTERNAL when the node is reset or powers up, then the node shall not execute any of its self-installation functions. See DDN-0432-0080 section 6.3.5 for details.

4.1.4.1 Preset Value

This variable shall be initialized to CFG_LOCAL when subsystem software is reloaded and when units are delivered from the factory.

4.2 Monitoring Object – Object #1

4.2.1 nvi01Subscribe

Declaration: network input sd_string("@1|1") UNVT_subscribe nvi01Subscribe

Description: Used by the CDT to set the required transmission rate for monitoring data sent to the CDT.

4.2.1.1 Data Value

See DDN-0432-0080 section 6.5.3.

4.2.2 nvo01StatusBits

Declaration: network output sd_string("@1|2") SNVT_state_64 nvo01StatusBits

Description: Current subsystem status.

Destination: CDT

4.2.2.1 Data Value

The Diagnostics Data Dictionary defines the status bit assignments and associated attributes for bits 0–55. Bits 56–63 represent a counter.

4.2.2.2 nvo01Parameter

Declaration: network output sd_string("@1|3") UNVT_parameter nvo01Parameter

Description: Current numeric parameter value.

Destination: CDT

4.2.2.3 Data Value

The Diagnostics Data Dictionary defines the numeric parameter ID assignments and associated attributes.

4.2.3 nvi01TransferState

Declaration: network input sd_string("@1|4") SNVT_state nvi01TransferState

Description: Used by CDT to suspend network traffic during file transfer operations.

4.2.3.1 Data Value

See DDN-0432-0080 section 6.5.7.

4.2.4 nvi01CDTParam

Declaration: network input sd_string("@1|5") UNVT_parameter nvi01CDTParam

Description: Current numeric parameter value.

4.2.4.1 Data Value

The following table defines the numeric parameter ID assignments.

Table 2 Parameter Data Required from CDT

ID	DESCRIPTION	UNITS	TRANSMISSION RATE (NOTE 1)	SCALE	OFFSET
1	Car speed	mph	2 sec	1	0
2	HVAC-A Temperature: Fresh Air (Exterior)	Degree F	30 sec	1	-40
5	Car Number		30 sec	1	0
6	Train Configuration		2 sec	1	0
7	C/I Position		2 sec	1	0
8	Other C/I Fault		2 sec	1	0

ID	DESCRIPTION	UNITS	TRANSMISSION RATE (NOTE 1)	SCALE	OFFSET
TBD	Spare	TBD	TBD		
TBD	Spare	TBD	TBD		
TBD	Spare	TBD	TBD		

Note 1: Maximum transmission rate set by CDT supplier.

4.3 SCI Version Object – Object #3

4.3.1 nvi03SCIVersionReq

Declaration: network input sd_string("@3|1") UNVT_sci_version_request nvi03SCIVersionReq

Description: Used by CDT to request SCI version information. SCI identified by index number.

4.3.1.1 Data Value

The following table defines the SCI index number assignments.

Table 3: SCI Index Number Assignment

SCI INDEX	SCI NAME	UPDATE FROM CDT?
1	Interior Camera	No
2	Outside Camera	No
3	Front Facing Camera	No
4	Cab Camera	No
5	Digital Video Recorder	No

4.3.2 nvo03SCIVersion

Declaration: network output sd_string("@3|2") UNVT_sci_version nvo03SCIVersion

Description: Populated by subsystem with requested SCI version information.

Destination: CDT

4.3.2.1 Data Value

See Table 4.

Table 4: SCI Information

SCI INDEX	SCI NAME	SCI TYPE (NOTE 1)	SCI NAME (8 CHAR)
1	Interior Camera	2	ICAM
2	Outside Camera	2	OCAM
3	Front Facing Camera	2	FCAM
4	Cab Camera	2	CCAM
5	Digital Video Recorder	2	DVR

Note 1: See DDN-0432-0080 (Section 6.7.2 nvoSCIVersion) for details.

5 Network Interface

5.1 General

The CCTV subsystem complies with the general monitoring scheme defined in DDN-0432-0080 section 6.

5.2 Subsystem Specific Network Interface Declarations

None.

6 Self-Installation Data

The following tables define the data needed to configure the node's network image to support self-installation.

6.1 Domain Configuration

Refer to DDN-0432-0080 section 5.1 for domain configuration details.

6.2 Location Configuration

The location string shall be updated by the subsystem after power-up according to its physical installation location.

The Neuron C source code configuration data declaration shall include:

```
config_data.location[0] = 'C';
config_data.location[1] = 'C';
config_data.location[2] = 'T';
config_data.location[3] = 'V';
config_data.location[4] = ' ';
```

For Car A:

```
config_data.location[5] = 'A';
```

For Car B:

```
config_data.location[5] = 'B';
```

6.3 Address Configuration

Table 5: Address Table

ENTRY	TYPE	DOMAIN	NODE	REPEAT TIMER	RETRY	RECEIVE TIMER	TRANSMIT TIMER	SUBNET
0	1	0	1	0	3	0	4	1
1	1	0	1	0	3	0	4	2
2	0	0	0	0	0	0	0	0
3	0	0	0	0	0	0	0	0
4	0	0	0	0	0	0	0	0
5	0	0	0	0	0	0	0	0
6	0	0	0	0	0	0	0	0
7	0	0	0	0	0	0	0	0
8	0	0	0	0	0	0	0	0
9	0	0	0	0	0	0	0	0
10	0	0	0	0	0	0	0	0

ENTRY	TYPE	DOMAIN	NODE	REPEAT TIMER	RETRY	RECEIVE TIMER	TRANSMIT TIMER	SUBNET
11	0	0	0	0	0	0	0	0
12	0	0	0	0	0	0	0	0
13	0	0	0	0	0	0	0	0
14	0	0	0	0	0	0	0	0

6.4 Network Variable Configuration

Table 6: Network Variable Configuration (CCTV)

ENTRY	VARIABLE	DIRECTION	PRIO	SERVICE	CAR A		CAR B	
					SELECTOR (NOTE 1)	ADDRESS INDEX	SELECTOR (NOTE 1)	ADDRESS INDEX
0	nci00NetConfig	0 (IN)	0	ACKD	0x0916	0x0F	0x0996	0x0F
1	nvi00ObjRequest	0 (IN)	0	ACKD	0x0901	0x0F	0x0981	0x0F
2	nvo00ObjStatus	1 (OUT)	0	ACKD	0x0902	0x00	0x0982	0x01
3	nvi00TimeStamp	0 (IN)	0	UNACKD_RPT	0x0803	0x0F	0x0803	0x0F
4	nvi01Subscribe	0 (IN)	0	ACKD	0x0906	0x0F	0x0986	0x0F
5	nvi01TransferState	0 (IN)	0	UNACKD	0x0109	0x0F	0x0109	0x0F
6	nvo01StatusBits	1 (OUT)	0	ACKD	0x090A	0x00	0x098A	0x01
7	nvo01Parameter	1 (OUT)	0	UNACKD	0x090C	0x00	0x098C	0x01
8	nvi03SCIVersionReq	0 (IN)	0	ACKD	0x090F	0x0F	0x098F	0x0F
9	nvo03SCIVersion	1 (OUT)	0	ACKD	0x0910	0x00	0x0990	0x01
10	nvi01CDTParam	0 (IN)	0	UNACKD	0x0107	0x0F	0x0187	0x0F

Note 1: Bit 7 (bit mask 0x0080) of the variable selector is set to zero (0) for car A and set to one (1) for car B.

Note 2: Turnaround and Authentication are set to zero (0) for all variables listed.